Data Sheet

Article number: 2301078921
Description: E+G Handwheel
VRTP.250+I-A20

Measures

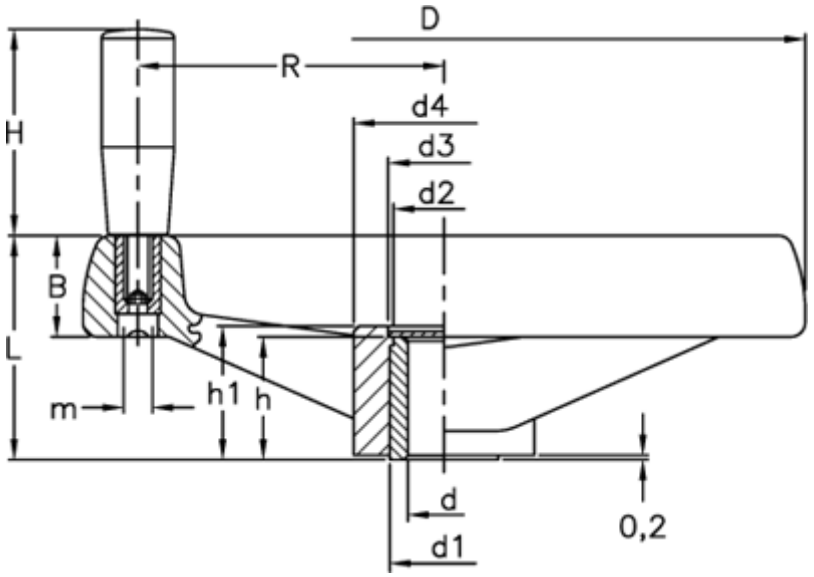

B	= 32	H	= 90
C (N m)	= 420	h	= 38
D	= 249	h1	= 40
d1	= 35	L	= 70
d2	= 33	L (J)	= 28
d3	= 34	m	= M10
d4	= 59	R	= 105
d H7	= 20		

Product drawings and brochures of any kind may contain errors for which Brd. Klee A/S cannot be liable.